harman kardon

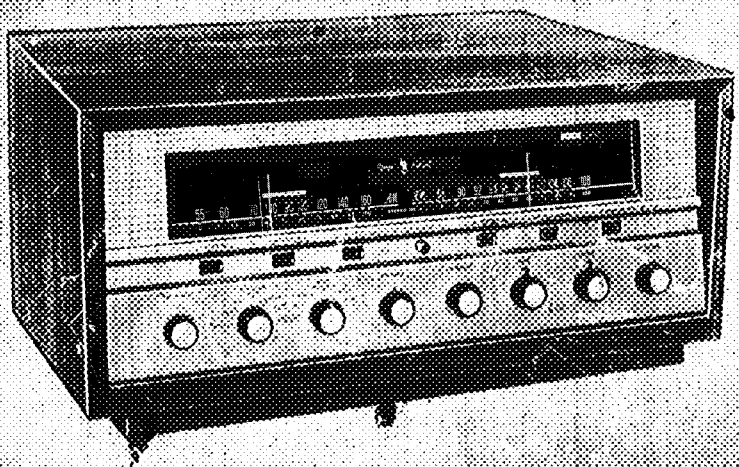

Stereo Festival II

MODEL TA260

INTEGRATED STEREOPHONIC RECEIVER

INSTRUCTION MANUAL

It is essential you read this instruction booklet carefully before installing your Stereo Festival II. You have invested in the finest high fidelity stereophonic control center available, into which many important and excellent engineering developments have been incorporated. Each is necessary for the proper operation of your system.

This instruction booklet has been written in simple non-technical language. If you will take time to read it first before doing anything else, you will find it an easy task to install and operate your new Model TA260 stereophonic receiver.

KEEP THIS BOOKLET AVAILABLE AT ALL TIMES FOR IT CONTAINS INDISPENSIBLE TECHNICAL AND SERVICE INFORMATION.

This is the Harman-Kardon Stereo Symbol. It is your assurance of superb stereo performance.

GENERAL DESCRIPTION

The Stereo Festival II, Model TA260, is by far the most versatile instrument ever designed. It may be used in any of the following ways.

1—Monophonic AM or FM Receiver.
2—Stereophonic Simulcast AM-FM Receiver.
3—Stereophonic FM Multiplex Receiver when used with the Harman-Kardon Multiplex Adapter.
4—Stereophonic Preamplifier-Amplifier for records and tape.

UNPACKING

After removing the Stereo Festival II from the shipping carton, inspect it carefully for signs of transit damage. The unit was subjected to many inspections and tests at the factory prior to final packing, and it therefore should be in perfect condition. If damage is visible, notify your dealer at once. If the instrument was shipped to you, notify the transportation company without delay.

Check the contents of the carton and folds of the packing material carefully before discarding it. The package should contain the following items:

1 Stereo Festival II, Model TA260
1 Instruction Booklet
1 Mounting Template and Mounting Instructions
1 Warranty Card
1 Package of Hardware for cabinet installation

WARRANTY POLICY

We urge you to completely fill in your warranty card and mail it to the factory without delay to protect your rights under warranty. The warranty cards are carefully filed for reference and should you require information on the use of this high fidelity unit, or repair service, we will be able to identify your set and reply quickly.

NOTE: It is necessary to receive factory authorization before returning a set for warranty repair either to the factory or to an authorized station. Repairs are to be returned on an Express Prepaid basis. A letter describing the exact difficulty must be enclosed with the unit.

WARRANTY

We warrant each Model TA260 to be free from defects in material and workmanship under normal use and service, and in accordance with the conditions herein below set forth, for a period of 1 year from date of delivery to the original purchaser, and agree to replace or repair any part or parts, with the exception of tubes which are under the manufacturer's 90 day warranty, returned to us within said 1 year, with transportation prepaid and which our examination shall disclose to our satisfaction to have been thus defective. This warranty does not include free labor, nor is it applicable to any instrument which shall have been repaired or altered in any way so as in our judgment to affect its stability or reliability nor which has been subject to neglect, misuse, abuse, negligence or accident nor which has had the serial number altered, effaced, or removed. Neither shall this warranty apply to any instrument which has been connected otherwise than in accordance with instructions furnished by us.

This warranty is expressly in lieu of all other warranties, express or implied, and of all other obligations or liability on our part, and we neither assume nor authorize any representative or other person to assume for us any other liability in connection with the sale of this instrument.

USING THE MODEL TA260 AS AN INTEGRATED STEREOPHONIC CONTROL CENTER

INSTALLATION PROCEDURE

Ventilation:

The unit is well ventilated in itself, but sufficient space must be allowed around it to permit proper air flow. Install the Stereo Festival II in a manner to allow for unrestricted circulation. Do not place books or other objects on the cage or cabinet or in the immediate vicinity of the instrument. Reducing the air flow will result in sharply reduced component and tube life. Allow at least 4 inches above the unit when custom installing into a cabinet. Refer to mounting instruction sheet for cabinet installation procedure.

Power Requirements:

Plug the AC line cord into any outlet furnishing 117 volt, 60 cycle AC current. The voltage may vary between 105 and 125 volts.

An AC convenience outlet is located on the rear panel of the instrument. The outlet, marked 1 AMP SWITCHED, is controlled by the ON/OFF push button on the front of the unit.

CAUTION: Do not exceed the amperage limit on the AC convenience receptacle.

Connecting the Speakers:

Your two speakers should be identical if possible to obtain optimum results. Experts agree that a perfectly matched system offers the best stereophonic reproduction. The speakers should be preferably placed along the same wall approximately 8 to 15 feet apart depending upon room size and furniture placement. It may be necessary to experiment with speaker placement until best results are obtained.

Use any type wire to connect your speakers to the Stereo Festival II. Lamp cord ("zip cord") is excellent and may be easily dressed around the molding for an inconspicuous and neat installation. Do not drive the staples or tacks through the center of the wire for this will short out the two sections and will decrease the overall volume or short out the speakers entirely. It is permissible to use approximately 100 feet of speaker connecting wire for each speaker without loss of volume.

Connect one length of lamp cord to your left speaker and attach the other end to the LEFT SPEAKER terminals on the rear panel of the TA260. (These are the two terminals on the left-hand side of the upper speaker terminal strip.) Similarly, connect another length of lamp cord to your right speaker, and attach the other end to the RIGHT SPEAKER terminals on the rear panel. (These are the two terminals on the left-hand side of the lower speaker terminal strip.) If your speakers have an impedance of 3 to 5 ohms, connect the IMPEDANCE SELECTOR leads to the 4 ohm terminals on the speaker terminal strips. If your speakers have an impedance of 6 to 10 ohms, connect the IMPEDANCE SELECTOR leads to the 8 ohm terminals. If your speakers have an impedance of 12 to 20 ohms, connect the IMPEDANCE SELECTOR leads to the 16 ohm terminals.

Carefully dress the speaker leads away from audio input cables and power lines. Keep the wiring neat and away from transformers and tubes to reduce hum pickup.

IMPORTANT: When the TA260 is used only for monophonic operation (and stereo is to be added at some later date) it is essential that both speaker output

terminals are terminated into speakers or into a speaker and resistive load. For example, if you have only one speaker, attach it to the Left Speaker Output connections and connect a 4, 8 or 16 ohm 25 watt wirewound resistor to the Right Speaker Output connections. This will assure proper loading of the output stage and will prevent damage to the output tubes. A more satisfactory solution would be to connect an additional speaker for monophonic listening instead of the or 16 ohm resistor.

3rd Channel Output:

One of the features of the TA260 is a third channel output jack. This output can be used for a remote basic amplifier-speaker system in addition to a regular stereo system, or as a center channel output for a basic amplifier-speaker system along with your regular stereo installation. In the latter arrangement, it serves to eliminate especially troublesome hole-in-the-middle problems due to acoustic difficulties.

The third channel output is one volt. The jack is located just above the rear panel on the top of the chassis. Use up to 25 feet of shielded lead equipped with standard phono plugs to connect the jack to the third channel amplifier input. All of the front-panel controls on the TA-260 also control the third channel output, with the exception of the Mode-Blend Control and the Stereo Normal-Reverse Switch.

Stereo Headphone Output Jack:

Another feature of the TA260 is a special jack on the rear panel for plugging in a set of stereo headphones. When the headphones are plugged in, the speakers are automatically disconnected. The jack can accept headphones with the same impedances as are available for speakers. Simply connect the speaker impedance selector leads to the 4, 8, or 16 ohm terminals on the rear panel in accordance with the impedance rating of your headphones. The headphone plug required for this jack is the Switchcraft Type 230F, or equivalent. It is important to use the right plug for this purpose for proper operation.

Connecting The FM Antenna:

Due to the exceptionally high FM sensitivity of the TA260, the 48″ piece of wire supplied with the unit will be sufficient antenna for all but the most difficult locations. One end of this wire should be stripped of insulation and attached to the rear screw terminal marked FM on the Antenna Terminal strip located on the rear of the chassis. The other end of this wire should be extended horizontally along the cabinet or table. Horizontal placement of the antenna wire provides proper polarization for optimum reception.

If an outdoor antenna is required to "reach" for distant stations, use a folded dipole or Yagi specifically cut for the FM band. A homemade 300 ohm "T" type antenna is not satisfactory and should not be used as a substitute for the 48″ piece of wire supplied with the set. The "T" type antenna has a tendency to pick up extraneous noise.

TV antennas are rarely satisfactory as they are not cut for the FM band and have a tendency to introduce ignition noise and other interference into the tuner circuit. They are not recommended except under unavoidable circumstances. Usually better results can be obtained with the 48″ piece of wire.

When using an outdoor antenna, attach the 300 ohm lead-in wire (twisting it 4-5 times for each running foot) to the antenna terminals on the rear of the TA260 marked FM and G.

Connecting The AM Antenna:

The AM swivel loopstick antenna on the rear of the TA260 chassis comprises all the antenna required for normal signal areas. In more remote locations an

additional outdoor antenna may be necessary. This should consist of a single wire, as long as is reasonably practical. It must be kept away from large metal objects, power lines or electrical machinery to insure reception without extraneous noise. Attach the external antenna to the rear terminal strip marked AM. The AM loopstick antenna may be swiveled as required for custom and bookshelf installation. If the metal cage is used, the loopstick should be moved down and away from the cage to prevent cancellation of the AM signals.

Connecting Your Stereo Record Player:

A stereophonic cartridge uses two output plugs. Provision has been made on the Stereo Festival to accommodate any of the three types of phonograph pickups available on the market.

MAGNETIC CARTRIDGE: The TA260 has two separate sets of low level inputs on the rear of the chassis marked MAG 1 and MAG 2. This enables the user to simultaneously connect a record changer and turntable arm to the receiver, or a tape playback deck and record player if preferred. The inputs are selected by the front panel MAGNETIC INPUT switch.

Connect the two outputs of your stereo magnetic cartridge to the L and R MAG 1 inputs on the TA260 chassis. Connect your other stereo magnetic cartridge or tape deck to the L and R MAG 2 input jacks.

CERAMIC CARTRIDGE: Connect the two outputs of your stereo ceramic cartridge to the L and R EXTRA inputs on the rear of the TA260 chassis. There are several stereo ceramic cartridges available that offer low output and are to be plugged into the MAG 1 or MAG 2 inputs instead of the usual high level EXTRA receptacles. Follow the cartridge manufacturer's recommendations.

CRYSTAL CARTRIDGE: Connect the two outputs of your stereo crystal cartridge to the L and R EXTRA inputs on the rear of the TA260 chassis.

Connecting A Monophonic Record Player:

A monophonic record player uses one connecting plug. If you are using a low output magnetic type cartridge, connect it to either the L or R MAG 1 or MAG 2 input. If you are using a monophonic ceramic or crystal cartridge, connect it to either the L or R EXTRA input.

Connecting Your Stereo Tape Deck:

A stereophonic tape deck utilizes two playback heads usually contained in one head assembly. Each head has its own output plug. Connect both plugs to the L or R MAG 1 or MAG 2 input receptacles located on the rear of the TA260 chassis.

Connecting Your Monophonic Tape Deck:

Attach the shielded lead from the monophonic tape head to either the L or R MAG 1 or MAG 2 input receptacle.

Connecting Your Stereo Tape Recorder:

Since most stereophonic tape recorders have their own preamplifiers, it is not desirable to connect the output of the recorder into the low level MAG 1 or MAG 2 input receptacles. This could result in overloading of the input stage and cause distortion. Connect one tape recorder output cable to the L EXTRA input and the other output cable to the R EXTRA input receptacle.

These connections will enable you to play back your stereo tapes. To make stereo recording connect your recorder as follows:

Connect the left input of your tape recorder to the TA260 L TAPE OUT receptacle. Similarly connect the right input of your recorder to the R TAPE

OUT receptacle located on the rear panel. This will enable you to make a stereophonic recording with the proper recording equalization as determined by your recorder, while simultaneously monitoring the program with the proper tone control, contour and loudness setting. The program material you wish to record is selected by the FUNCTION SELECTOR switch on the front panel. To record a stereo radio program set the FUNCTION SELECTOR switch to AM-FM or FM MULTI. To tape stereo records, set the FUNCTION SELECTOR switch to MAG-PHO or EXTRA depending upon the stereo cartridge you are using. The MODE-BLEND switch must remain in the STEREO position.

The recording level from the TA260 TAPE OUT receptacles is one-half volt and is unaffected by the tone and loudness controls to assure a "flat" recording signal.

Connecting Your Monophonic Tape Recorder:

If you are using a monophonic tape recorder with the TA260, connect the recorder output to the L or R EXTRA input receptacle. This will enable you to play back your monophonic tapes. If your tape recorder is a stereo playback-monophonic record, connect the output as described in the previous paragraph, but connect the input as described below.

Connect the input of your monophonic tape recorder to either the L or R TAPE OUT receptacle on the rear of the TA260 chassis. This will enable you to make a monophonic tape recording with the proper equalization as determined by your recorder, while simultaneously monitoring the program with the proper tone control, contour and loudness setting. The program material you wish to record is selected by the FUNCTION SELECTOR switch on the front panel. To record a radio program, set the FUNCTION SELECTOR switch to AM, FM or FM-AFC. To tape monophonic records, set the FUNCTION SELECTOR switch to MAG-PHO or EXTRA depending upon the cartridge you are using. Set the MODE-BLEND control on the front panel to MONOPHONIC.

Connecting an FM Multiplex Adapter:

In those localities where FM Multiplex broadcasting is available, attach the adapter to the MULTI IN receptacles on the rear of the TA260. FM program material for the adapter is supplied from the output receptacle labeled MULTI OUT. Follow the instructions supplied with the adapter for complete hookup information.

OPERATING THE MODEL TA260 AS AN INTEGRATED RECEIVER

Every control on a well designed and honestly considered high fidelity instrument has a specific useful function related to each of the other controls. A brief explanatory note on the relationship of the various front panel controls will doubtless prove useful in organizing and clarifying them for you.

Bass and Treble Tone Controls:

The BASS and TREBLE tone controls on the TA260 provide the full range of tonal adjustment necessary for stereo high fidelity listening. The tone control range is considerable and can adequately adjust the low and high frequencies in accordance with your listening preference, speaker characteristics and room acoustics.

You will note that the BASS and TREBLE controls each have two knobs, one in front of the other. The front knob controls the right channel and the rear knob controls the left channel. The front and rear knobs are coupled with a new type friction-clutch, so that the BASS or TREBLE tone of both channels can be adjusted simultaneously by turning the front or main body of the knob. How-

ever, if the two channels require different tone control settings, due perhaps to differences in speakers or room acoustics, the two BASS knobs may be adjusted independently to balance the differences, and from then adjusted simultaneously for best overall tone quality. The two TREBLE knobs can be similarly adjusted. To set the two knob-sections independently, hold one with your right hand while turning the other with your left hand.

To adjust the system set the MODE-BLEND switch to MONOPHONIC, and play a monophonic record or radio program. Set the two friction clutch tone controls in accordance with your speaker characteristics and room acoustics. The system will now be tonally balanced for monophonic and stereophonic listening.

Loudness Control:

The loudness control on the TA260 is essentially two controls in one, mechanically tied together or ganged, to be operated by one knob. This control is used to adjust the volume level of any program material fed into the stereo system. Its effect can be modified by the operation of the CONTOUR switch.

Contour Switch:

One of the limitations of human hearing is its tendency to lose sensitivity to the very low pitched sounds as the program sound level is reduced. It is this characteristic (known as the Fletcher-Munson effect) which causes one to play music programs at high listening levels in order to experience the full rich tone available from fine modern recordings.

The Harman-Kardon CONTOUR switch compensates for this effect thus eliminating high listening levels as a requisite for full enjoyment of reproduced music. For warm, full-bodied reproduction at low listening levels, throw the CONTOUR switch to ON. At high levels, the CONTOUR switch has no effect.

Balance Control:

The nature of stereophonic reproduction is such that it requires two identical channels to attain the highest degree of faithfulness and spatial distribution. Any variation in the efficiency of one channel as compared to the other will disturb this relationship. As there may be slight differences between the two speakers, tape heads, cartridge coils, etc., the TA260 includes a special control to balance one channel against the other. Sufficient range is covered by this control to permit rebalancing of the overall system even in extreme cases where unbalance exists.

It must be noted that the BALANCE control may be set anywhere within its range of adjustment to attain system balance.

Mode-Blend Control:

This control serves a dual function in the operation of the TA260. In its extreme counterclockwise position, marked STEREO, it permits the unit to operate stereophonically. In addition, if a "hole-in-the-middle" effect is observed, the control may be rotated clockwise in the amount needed to eliminate it. In this latter function it operates as a stereo blend control. For monophonic operation, rotate the control to its extreme clockwise position, marked MONO, and leave it there.

Stereo Normal-Reverse Switch:

When operating the TA260 stereophonically, it may be desirable to reverse the two channels of program material. This switch permits you to accomplish this reversal on the front panel.

At this writing, most newly recorded stereophonic discs follow the established industry standard, so that your left speaker will reproduce the program as picked up by the left recording microphone when the MODE-BLEND control is in the

STEREO position and the STEREO switch is in the NORMAL position. However, this is not necessarily so for older recordings. While one label may present the orchestra with the bass section on the right and the violins on the left, another recording company may reverse this procedure. Some of us prefer to listen to a symphony orchestra in the same relative orientation as in the concert hall. The REVERSE position on the STEREO switch serves to reverse the apparent locations of instruments in an orchestra to duplicate the original setting where necessary.

For those who do not have matched speakers for stereophonic reproduction, the REVERSE position on the STEREO switch serves an additional purpose. In "Ping-Pong" stereo recordings, the bass is sometimes favored on one side, while the higher frequencies may appear on the other channel. By experimenting with the STEREO switch it is possible to channel the low frequencies through the speaker system having the best bass response. Merely throw the STEREO switch back and forth between NORMAL and REVERSE until the low frequencies are reproduced by the speaker system with the better low frequency response.

The NORMAL position on the STEREO switch maintains the Left-Right relationship for properly made records.

Function Selector Switch:

The FUNCTION SELECTOR switch selects the desired type of program source and has 7 switching positions. EXTRA selects any device connected to the two EXTRA inputs on the rear of the chassis. If you are using a monophonic or stereophonic ceramic or crystal cartridge, set the FUNCTION SELECTOR switch to EXTRA to play your records. AM position selects the AM tuner for monophonic operation; FM selects the FM tuner for monophonic operation. FM-AFC selects the FM tuner for monophonic operation, but with the addition of an automatic frequency control circuit. The operation of this circuit will be discussed in a later paragraph. AM-FM selects both AM and FM tuners for simulcast stereo reception. FM-MULTI activates the two multiplex receptacles on the rear of the chassis for multiplex reception. MAG-PHO/TAPE HD selects your low level magnetic cartridge or tape playback deck for operation.

FM-AFC:

FM broadcasting, by its very nature, eliminates almost all natural and man-made static. However, the characteristics of FM which makes this possible also causes problems in tuning. The TA260 incorporates a special electronic circuit known as Automatic Frequency Control that overcomes these problems and insures proper tuning even if the manual tuning is not accurately done. Therefore AFC always keeps the station in the center of the channel and eliminates distortion caused by inaccurate tuning.

In order to take maximum advantage of the benefits of AFC, it is suggested that fine tuning be done with the Function Switch in the FM position. When the switch is then turned to the FM-AFC position the AFC will improve this careful tuning by a factor of 10 to 1. This procedure is especially recommended when a weak station is being tuned on a channel adjacent to a stronger one. This will prevent the AFC from reaching for the more powerful signal and skipping over the weaker one. If the weaker station is tuned in without the AFC, when the AFC is applied it will lock it in permanently.

Magnetic Input Switch:

This front panel slide switch selects between MAG 1 and MAG 2 input receptacles on the rear panel of the chassis. If your stereo cartridge is connected to the L and R MAG 1 inputs and your stereo tape deck to L and R MAG 2,

throw the MAGNETIC INPUT switch to position 1 for phono and to position 2 to play back your tapes.

NOTE that operation of the MAGNETIC INPUT switch may require re-setting of the EQUALIZATION switch as explained below.

Equalization Switch:

In order to achieve good reproduction of the wide range of frequencies in music and to make necessary adjustments for the limitations of the recording technique, record manufacturers have found it necessary to modify the actual frequency response of the music while it is being recorded. Thus, to avoid over-cutting and consequent distortion, a measured and deliberate reduction is effected in low frequency response by selecting a "turnover frequency" and by recording attenuated response below that point. To assure optimum signal to noise at the high frequency end when the record is played at home, the highs are deliberately exaggerated during the recording process. A measured and deliberate boost is effected above a certain frequency. This combination of deliberate exaggeration at the low and high ends of the frequency response can be expressed in a recording curve. When the record is played a mirror image of that curve should be available so that the ideal "flat" response may be achieved.

The front panel EQUALIZATION switch selects the proper equalization for record and tape play back. When playing records with a magnetic cartridge throw this switch to the RIAA position. When playing tapes throw the switch to NARTB.

The EQUALIZATION switch must always be properly set in order to achieve best tone balance.

Scratch Filter:

In the event of objectionable high frequency record scratch throw the SCRATCH FILTER switch to ON. This will roll off the higher frequencies to clear up your older records.

Rumble Filter Switch:

At times, record changers, turntables and even some FM stations produce an objectionable low frequency signal that is strong enough to be introduced into the playback system. This is known as rumble and can be eliminated by the special low frequency roll off switch on the front panel. Whenever rumble is encountered throw the RUMBLE FILTER to ON.

Power On/Off Switch:

Depress the red push button power ON/OFF switch to turn the set on. Depress the button again to turn the set off.

Speaker Phasing Switch:

When more than one speaker is used in any music reproducing system they must be connected in a manner as to aid each other, rather than to work against one another. Since it is necessary to use two speakers for stereophonic reproduction, this caution appplies. Checking for proper phase, and correcting if necessary, is quite simple.

Place the MODE-BLEND control in the MONOPHONIC position and play a monophonic record with readily apparent bass tones. Listen carefully to the strength and clarity of the bass while moving the speaker PHASING switch, located on the chassis, back and forth between 0° and 180°. Select the position on the PHASING switch which gives maximum bass reproduction. Once the phase is established the PHASING switch may remain in the set position or may be switched as preferred to test for proper phasing at any time. Improper speaker phasing will create what is commonly termed as a "hole in the middle" effect for

stereophonic reproduction and at times will actually eliminate or shift certain instruments from their proper perspective in the orchestra.

AM and FM Tuning Controls:

These controls are located on the front panel and are used to tune for AM or FM stations. For simulcast AM-FM stereo reception, it is necessary to separately tune the AM and FM sections. Set the FUNCTION SELECTOR switch to AM and tune for the desired station. Now set the FUNCTION SELECTOR to FM and tune for the corresponding FM station. Turn the FUNCTION SELECTOR to AM-FM to operate both tuners simultaneously.

Tuning Indicators:

For ease and accuracy in tuning, the TA260 incorporates two electronic eye tuning indicators. When locating a station, tune for minimum dark space between the green bars.

MAINTENANCE AND REPAIRS

Hum and Noise:

In any high fidelity installation, hum may be caused by the interconnection of a record player, tuner and amplifier, as a result of the cables and different grounds. If hum is experienced with the TA260, disconnect everything but the speakers from the receiver. If hum persists, reverse the AC line cord. Also perform the balancing adjustments outlined in a later paragraph. Plug in the record player and if hum appears, reverse the record player power plug and connect a single lead from the record player chassis to a good ground point on the chassis of the TA260. Connect your other devices in this manner. CAUTION: Hum may be also induced by defective connecting cables or by running these cables too close to a strong AC field.

Output Tube Balancing Controls:

There are two OUTPUT TUBE BALANCING controls located between the output tubes. These controls are factory adjusted and should not be touched unless tubes are changed. If adjustment is necessary follow the procedure listed below.

1. Set the LOUDNESS control to minimum.
2. Slowly rotate each BALANCING control for minimum hum.
3. If the hum level is not readily apparent, set the control to the mid-position.
4. For absolute accuracy use an IM analyzer and set for lowest IM distortion.

Fuse:

The TA260 is fused in the AC primary to prevent damage to tubes and components. The value of the fuse is 4 AMP, Type MTH4 and should be replaced only with one of the same rating. Replacing with a fuse of a higher rating will not protect the instrument and may result in severe damage, which will not be covered by the factory warranty.

Tube Checking and Service:

It is recommended to test the tubes of this receiver every twelve months in order to insure optimum performance. When a tube is changed in the tuner portion, it may be necessary to have the instrument recalibrated and realigned.

If this instrument should not perform properly during the first year after date of purchase, contact the factory for instructions. DO NOT have it repaired locally without first contacting Harman-Kardon for advise. The factory has many authorized warranty service stations in the United States, and for the station nearest you, please write or call our Customer Service Department, Harman-Kardon, Inc., Plainview, New York. Be sure to include the model and serial number of the unit. A brief description of your other components is often of help in answering your questions.

ALIGNMENT PROCEDURE

FM Alignment

FUNCTION SWITCH SETTING	SIGNAL GENERATOR FREQ.	SIGNAL GENERATOR MOD.	SIGNAL INPUT POINT	OUTPUT INDICATOR	CONNECT INDICATOR TO:	DIAL SETTING	ADJUST	OUTPUT INDICATION
FM	10.7 MC	300 KC FM 60 CPS	FM MIXER GANG	AC-VTVM OR SCOPE	TEST POINT		3 FM IF TRANS.	MAX GAIN & SYMMETRY
FM	10.7 MC	300 KC FM 60 CPS	FM MIXER GANG	AC-VTVM OR SCOPE	TUNER OUTPUT		DISCR. TRANS.	S PATTERN OF MAX GAIN & SYMM.
FM	106 MC	300 KC FM 60 CPS	FM ANT. TERMINAL	AC-VTVM OR SCOPE	TEST POINT	106 MC	106 MC OSC RF. MIXER TRIMMERS	MAXIMUM OUTPUT
FM	90 MC	300 KC FM 60 CPS	FM ANT. TERMINAL	AC-VTVM OR SCOPE	TEST POINT	90 MC	OSC. RF. MIXER COILS	MAXIMUM OUTPUT

AM Alignment

FUNCTION SWITCH SETTING	SIGNAL GENERATOR FREQ.	SIGNAL GENERATOR MOD.	SIGNAL INPUT POINT	OUTPUT INDICATOR	CONNECT INDICATOR TO:	DIAL SETTING	ADJUST	OUTPUT INDICATION
AM	455 KC	30% AM	AM RF GANG	AC-VTVM OR SCOPE	TUNER OUTPUT	1600 KC	2 AM IF TRANS.	MAXIMUM OUTPUT
AM	1400 KC	30% AM	AM ANT. TERM.	AC-VTVM OR SCOPE	TUNER OUTPUT	1400 KC	OSC, ANT & RF TRIMMERS	MAXIMUM OUTPUT
AM	600 KC	30% AM	AM ANT. TERM.	AC-VTVM OR SCOPE	TUNER OUTPUT	600 KC	OSC COIL LOOPSTICK & RF TRANS	MAXIMUM OUTPUT
AM	1400 KC				REPEAT STEP 2			

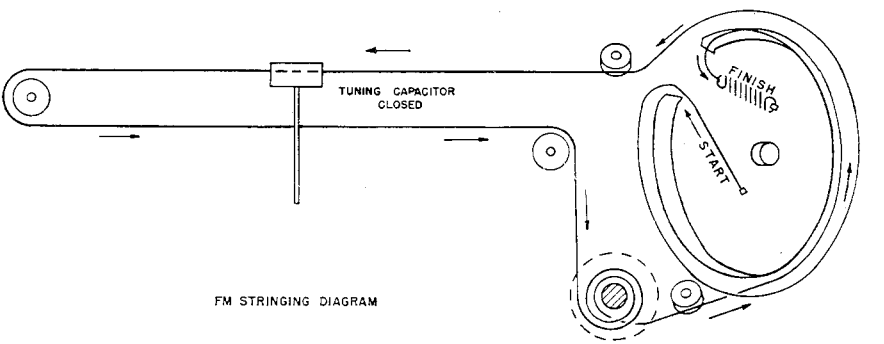

FM STRINGING DIAGRAM

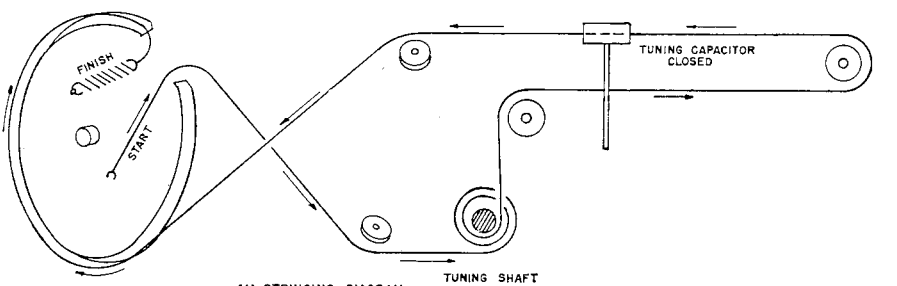

AM STRINGING DIAGRAM

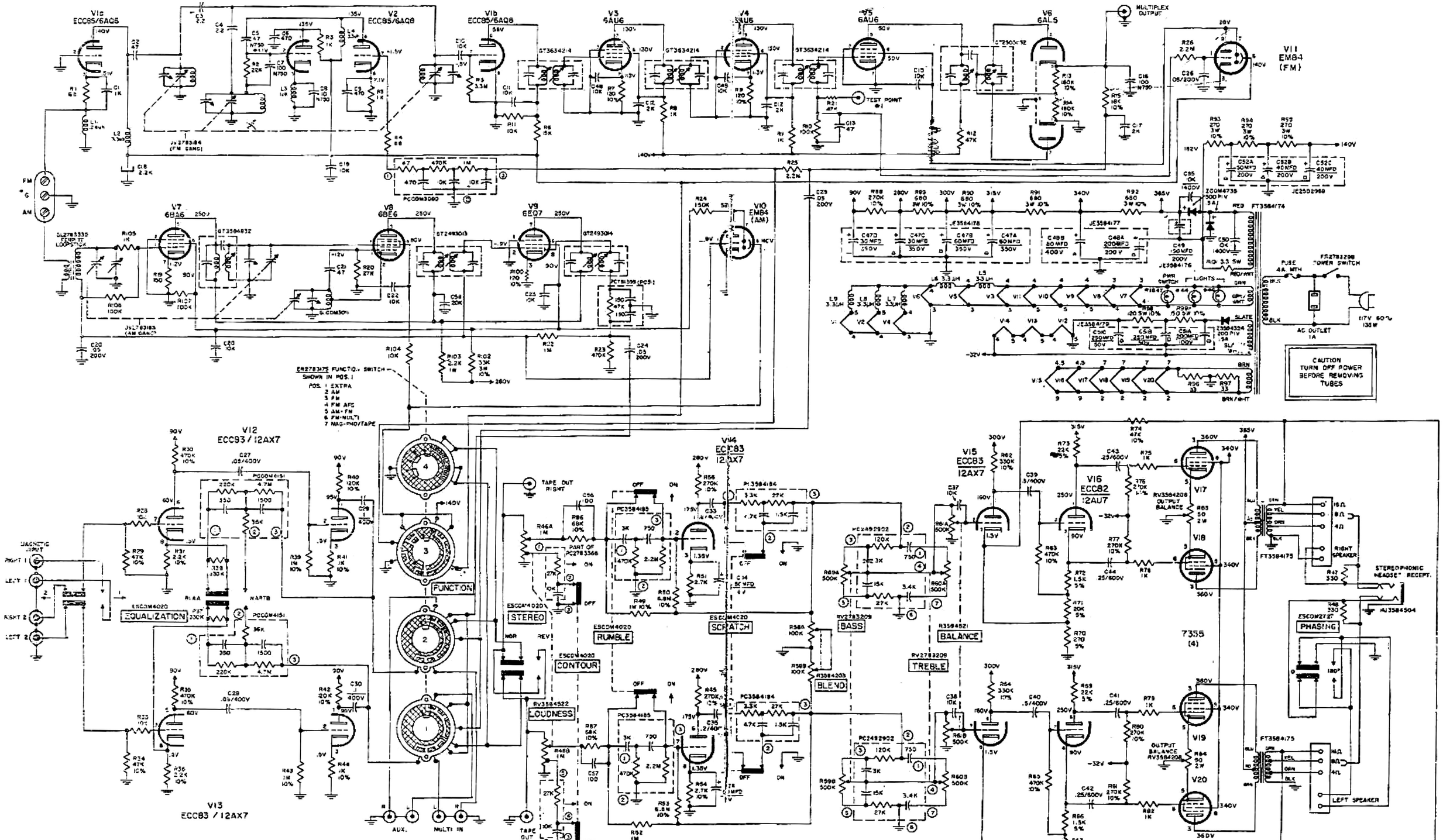

RESISTANCE CHART

TUBE	1	2	3	4	5	6	7	8	9
V1 ECC85	—	0	68	0	0	—	3.3M	0	0
V2 ECC85	—	2.2K	0	0	0	—	6M	1K	0
V3 6AU6	0.6	0	0	0	—	—	120		
V4 6AU6	0.6	0	0	0	—	—	120		
V5 6AU6	100K	0	0	0	—	—	180K		
V6 6AL5	0	180K	0	0	360K	0	180K		
V7 6BA6	3.5M	0	0	0	—	—	150		
V8 6BE6	27K	0.6	0	0	—	—	7M		
V9 6EQ7	0	1.5M	0	0	0	—	—	500K	—
V10 EM840	3.5M	—	0	0	0	—	—	—	—
V11 EM840	500K	—	0	0	0	—	—	—	—
V12 ECC83	—	1M	1K	—	—	—	57K	2.2K	—
V13 ECC83	—	1M	1K	—	—	—	57K	2.2K	—
V14 ECC83	—	2M	2.7K	—	—	—	2M	2.7K	—
V15 ECC83	—	250K	270	—	—	—	250K	270	—
V16 ECC82	—	500K	21K	—	—	—	1500K	21K	—
V17 7355		—	—	—	25	270K	—	—	—
V18 7355		—	—	—	25	270K	—	—	—
V19 7355		—	—	—	25	270K	—	—	—
V20 7355		—	—	—	25	270K	—	—	—

NOTES:
UNLESS OTHERWISE SHOWN:
1 ALL RESISTORS 1/2 WATT 20%.
2 ALL CAPACITORS WITH DECIMAL TO BE PAPER IN MFD
3 ALL CAPACITORS WITHOUT DECIMAL TO BE GENERAL PURPOSE CERAMICS 500WVDC IN MMF.
4 ALL VOLTAGES ARE DC.
5 ALL RESISTANCES ARE IN OHMS.
6 * MEASURED WITH LOW CAPACITANCE PROBE.

VOLTAGE & RESISTANCE READINGS

BLEND CONTROL IN CCW
STEREO SWITCH IN NOR POSITION.
BALANCE CONTROL CENTERED.
LOUDNESS CONTROL MAX C.W.
TREBLE & BASS CONTROLS FLAT.
CONTOUR SWITCH OFF, RUMBLE & SCRATCH OFF.
FUNCTION SWITCH IN AM-FM POSITION
TUNED OFF STATION

$423
S3584387-D

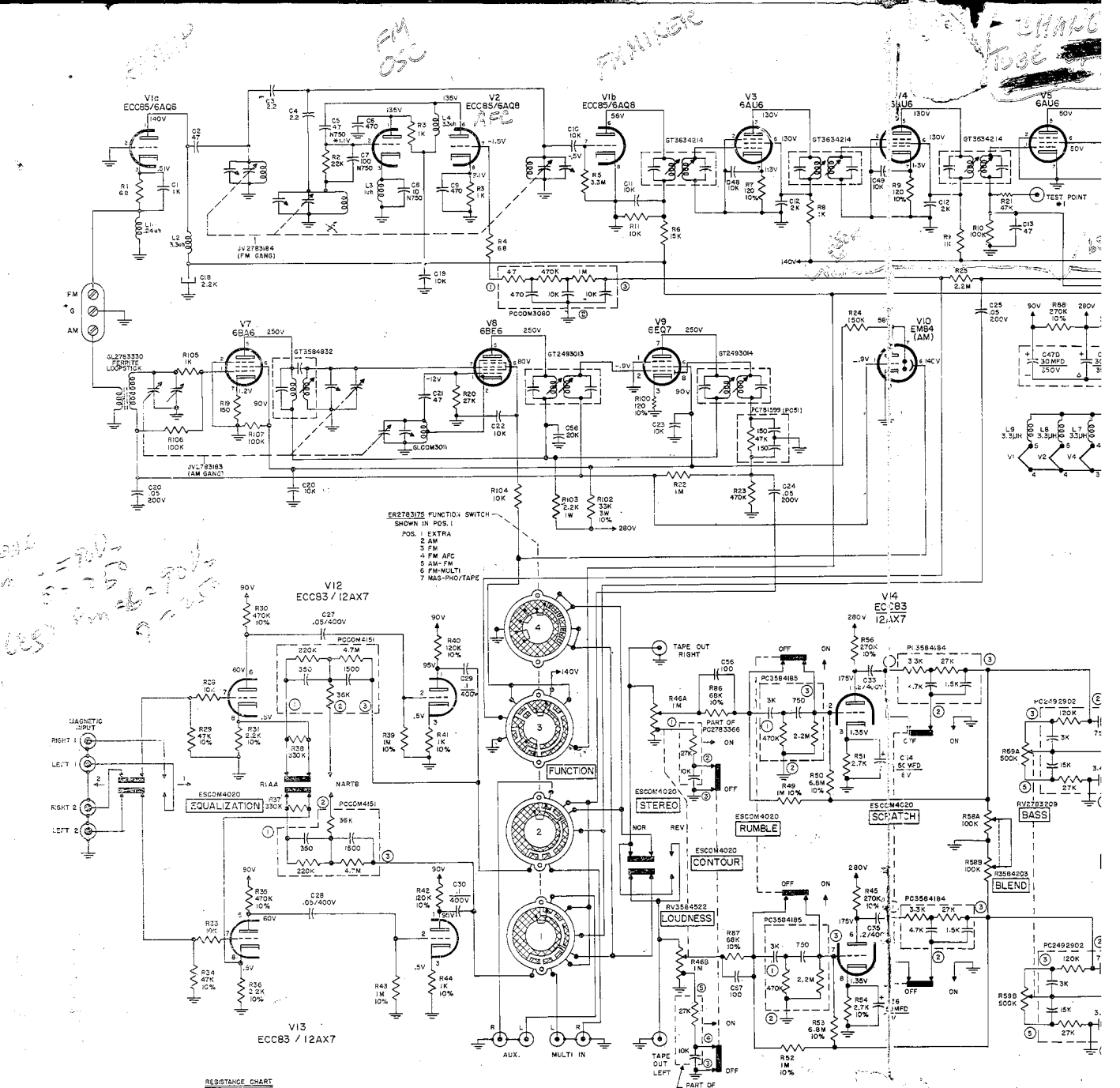

RESISTANCE CHART

TUBE	1	2	3	4	5	6	7	8	9
V1 ECC85	—	0	68	0	0	—	3.3 M	0	0
V2 ECC85	—	2.2 K	0	0	0	—	4 M	1 K	0
V3 6AU6	0.6	0	0	0	—	—	120		
V4 6AU6	0.6	0	0	0	—	—	120		
V5 6AU6	100 K	0	0	0	—	—	180 K		
V6 6AL5	0	180K	0	0	360K	0	180 K		
V7 6BA6	3.5 M	0	0	0	—	—	150		
V8 6BE6	27K	0.6	0	0	—	—	7 M		
V9 6EQ7	0	1.5M	0	0	0	—	—	500K	—
V10 EM840	3.5 M	—	0	0	0	—	—	—	—
V11 EM840	500K	—	0	0	0	—	—	—	—
V12 ECC83	—	1 M	1K	—	—	—	57K	2.2K	—
V13 ECC83	—	1 M	1K	—	—	—	57K	2.2K	—
V14 ECC83	—	2 M	2.7K	—	—	—	2 M	2.7K	—
V15 ECC83	—	250K	270	—	—	—	250K	270	—
V16 ECL82	—	500K	21K	—	—	—	500K	21K	—
V17 7355	—	—	—	—	25	270K	—	—	—
V18 7355	—	—	—	—	25	270K	—	—	—
V19 7355	—	—	—	—	25	270K	—	—	—
V20 7355	—	—	—	—	25	270K	—	—	—

NOTES:
UNLESS OTHERWISE SHOWN:
1. ALL RESISTORS 1/2 WATT 20%.
2. ALL CAPACITORS WITH DECIMAL TO BE PAPER IN MFD.
3. ALL CAPACITORS WITHOUT DECIMAL TO BE GENERAL PURPOSE CERAMICS 500WVDC IN MMF.
4. ALL VOLTAGES ARE DC.
5. ALL RESISTANCES ARE IN OHMS.
6. * MEASURED WITH LOW CAPACITANCE PROBE.

VOLTAGE & RESISTANCE READINGS

BLEND CONTROL IN CCW
STEREO SWITCH IN NOR. POSITION.
BALANCE CONTROL CENTERED.
LOUDNESS CONTROL MAX. C.W.
TREBLE & BASS CONTROLS FLAT.
CONTOUR SWITCH OFF, RUMBLE & SCRATCH OFF.
FUNCTION SWITCH IN AM-FM POSITION
TUNED OFF STATION.

S423
S3584387-D

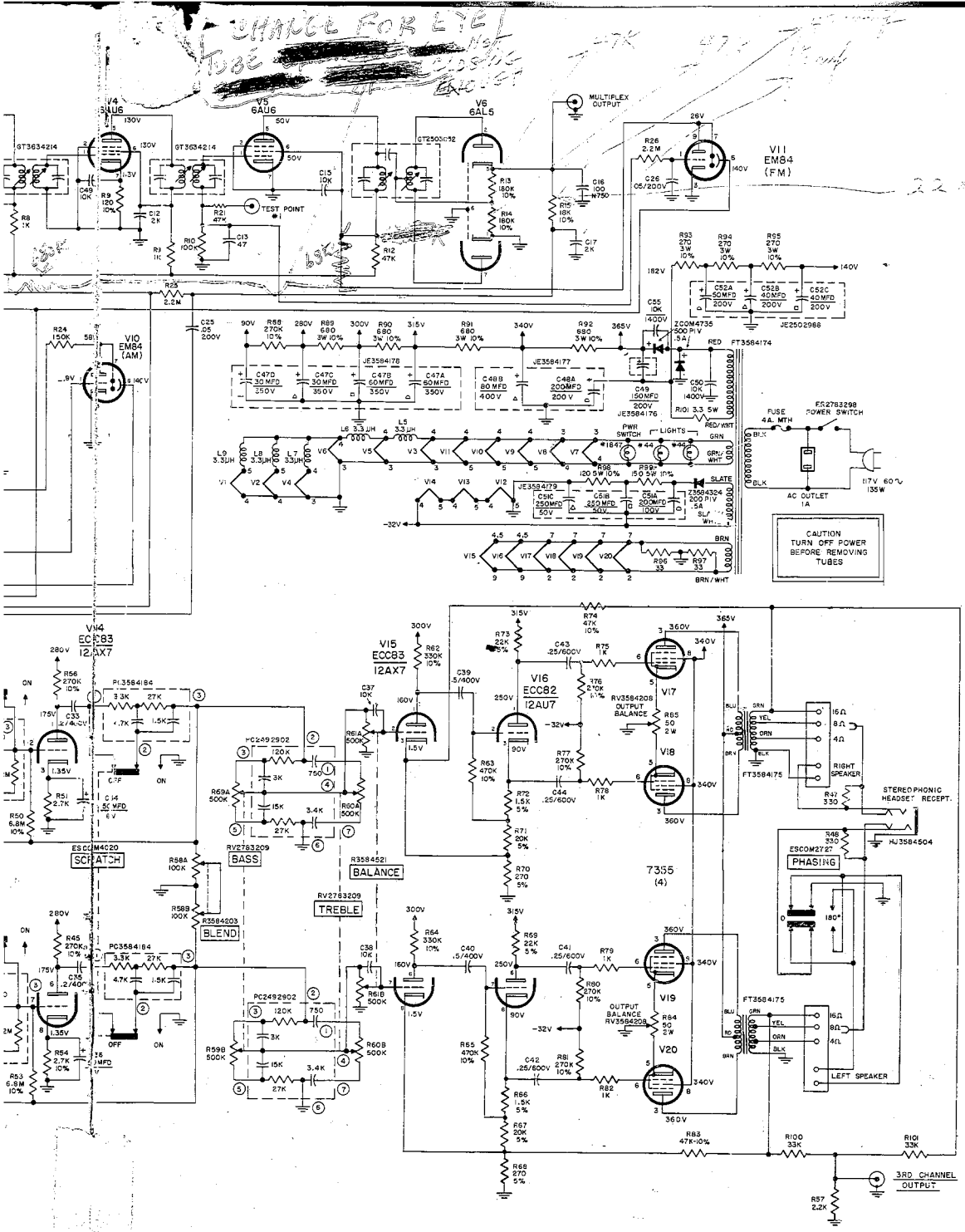
V4 6AU6
V5 6AU6
V6 6AL5
V11 EM84 (FM)
V10 EM84 (AM)
MULTIPLEX OUTPUT
TEST POINT #1
FUSE 4A. MTH
FR2783298 POWER SWITCH
AC OUTLET 1A
117V 60~ 135W
CAUTION TURN OFF POWER BEFORE REMOVING TUBES
V14 ECC83 12AX7
V15 ECC83 12AX7
V16 ECC82 12AU7
V17
V18
V19
V20
7355 (4)
ESCOM4020 SCRATCH
RV2783209 BASS
RV3584521 BALANCE
RV2783209 TREBLE
RV3584203 BLEND
ESCOM2727 PHASING
RV3584208 OUTPUT BALANCE
RIGHT SPEAKER
LEFT SPEAKER
STEREOPHONIC HEADSET RECEPT.
HJ3584504
3RD CHANNEL OUTPUT

TA260 PARTS REPLACEMENT LIST

Part No.	Description	Pric
ER2783175	Switch, Rotary: Function Selector	$ 3.5
EP3424603	Switch, Power On-Off	.7
PCOM3256	Pushbutton Jewel, Red, for Power Switch	.2
ESCOM2727	Switch, Slide: Speaker Phasing	.3
ESCOM4420	Switch, Slide: Front Panel	.3
RV3584521	Control, Balance	1.9
RV3584203	Control, Mode-Blend	1.8
RV3584522	Control, Loudness	2.1
RV2783209	Control, Concentric: Tone	2.2
RV3584208	Control, Output Tube Balance	.8
ZCOM4735	Silicon Rectifier, 500 PIV, Type SD95A	3.8
Z3584324	Silicon Rectifier, 200 PIV	2.8
JE3584176	Electrolytic Capacitor: 150UF/200V	2.1
JE3584177	Electrolytic Capacitor: 80UF/350V/200UF/200V	3.1
JE3584178	Electrolytic Capacitor: 60-60UF/350V, 30-30UF/300V	3.2
JE3584179	Electrolytic Capacitor: 200UF/100V, 250-250UF/50V	3.2
JE2502988	Electrolytic Capacitor 50-40-40UF/200V	2.3
JE3584255	Electrolytic Capacitor: 50UF/6V	.7
KB1142117	Pilot Lamp, Type #1847	.2
KBCOM3429	Dial Lamp, Type #44	.3
HC24625	Receptacle, AC Convenience Outlet	.25
ZCOM3299	Fuse, 4 Ampere, Buss Type MTH 4	.25
HC33901	Fuse Holder (with cap)	.8
FT3584174	Transformer, Power	22.5
FT3584175	Transformer, Output	20.7
GT3634214	Transformer, 1st, 2nd and 3rd FM-IF	1.5
GT2503052	Transformer, FM Discriminator	2.0
GT3584832	Transformer, AM-RF	2.1
GT2493013	Transformer, 1st AM-IF	1.25
GT2493014	Transformer, 2nd AM-IF	1.4

GL2783349	Coil, FM Oscillator	.25
GL2783350	Coil, 2nd FM-RF	.25
GL2783391	Coil, 1st FM-RF	.25
GC3584423	Choke, RF, 3.3 mh	.25
GC2503069	Choke, RF, 1 mh	.25
GC28831	Choke, RF, .24 mh	.25
JV2783183	Capacitor, AM Tuning	5.25
JV2783184	Capacitor, FM Tuning	5.25
JV20688	Capacitor, FM Osc. Trimmer, 1-10 UUF	.25
GL2783330	Antenna, AM Loopstick	2.25
P481329	Tuning Ring for AM Loopstick	.05
W24711	Antenna, FM, 48″ wire	.20
PC2492902	PC Plate, Tone	1.00
PC2783366	PC Plate, Contour	.75
PC3584184	PC Plate, Scratch Filter	.75
PC3584185	PC Plate, Rumble Filter	.75
PCCOM4151	PC Plate, Equalization	.75
PCOM3080	PC Plate, FM AFC	.75
PC781599	PC Plate, AM Detector	.75
HJ3584504	Jack, Stereo Headphones (for use with Switchcraft type 230F Plug or equivalent)	.80
P3584346	Dial Glass	1.75
P3584356	Dial Pointer, FM	.55
P3584357	Dial Pointer, AM	.55
B3584254	Escutcheon	10.75
PCOM4350	Knob, Rear Concentric	.15
PCOM4351	Knob, Front Concentric, with White Line	.30
PCOM4352	Knob, Dual Dummy (Function Switch)	.50
PCOM4353	Knob, Tuning	.25
PCOM4353	Knob, with white line	.25
KQ6-16SC	Shelf Mounting Screw, #6 x 1″, Set of four	.10
KW6-SC	Shelf Mounting Flatwasher, #6, Set of four	.05
L3584284	This Instruction Book, Additional Copies	1.00

Prices are subject to change without notice.